REPLACEMENT OF METAL-RUBBER-METAL BUSHING WITH METAL-POLYURETHANE OR METAL-RUBBER NON-GLUED (MANUAL #17)

Before replacement

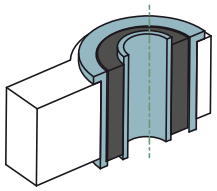

Removing the bushing

1

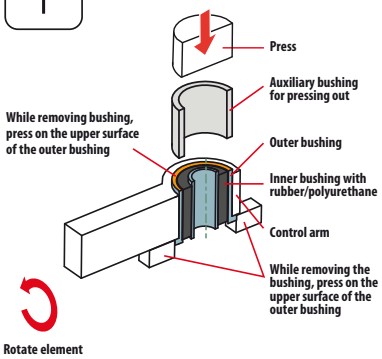

2

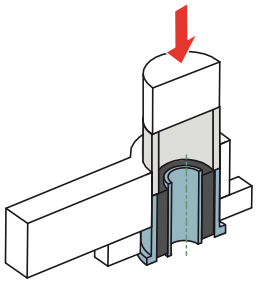

Correctly removed element

ATTENTION!

Before installation of the new bushing, precisely clean the socket and make chamfer to press the new element easier

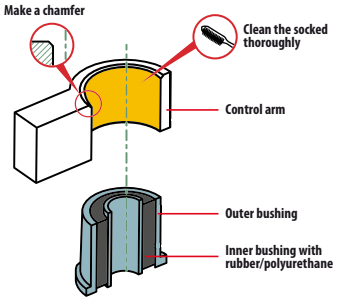

INSTALLATION

1

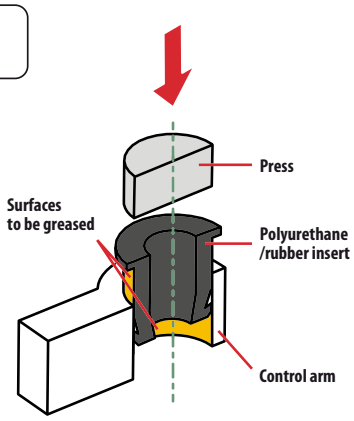

ALL ELEMENTS SHOULD BE PROPERLY LUBRICATED WITH THE SUPPLIED SILICONE GREASE

2

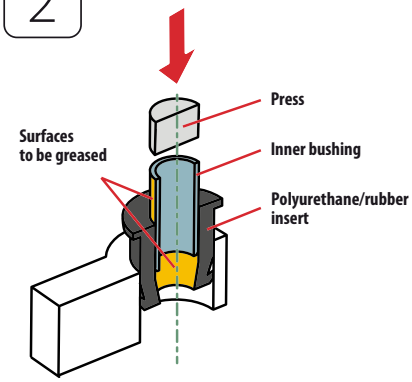

WHILE PUSHING THE INNER BUSHING, THE PRESS THE NEW POLYURETHANE / RUBBER INSERT TO ITS HALF OF ITS LENGTH, THEN PRESS IT ON THE METAL BUSHING

3

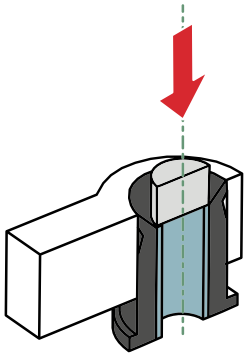

PRESS THE NEW INSERT UNTIL THE FLANGE CAME OUT FROM THE BOTTOM

4

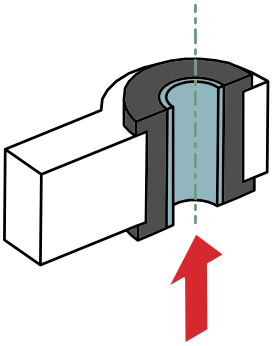

ALIGNING INNER BUSHING AND POLYURETHANE/RUBBER INSERT TO SOCKET

5

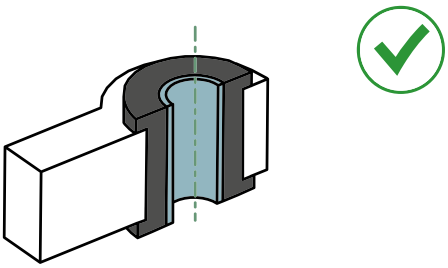

CORRECTLY INSTALLED INSERT